Clay County Park

Wakefield, Kansas

Stay the weekend or spend a season.

Clay County Park
Wakefield, KS

Blue – Green Algae

Park Manager *Mike Carney*

- The City Of Wakefield
- The Development Of The Park
- The Growth Of The Park
- Blue – Green Algae
- K-State's Involvement

CITY OF
WAKEFIELD, KS

The City of Wakefield

- The City of Wakefield located in Clay County has a population around 900 and offers many things you will not find elsewhere around the lake. There are Church's a School 2 Gas Stations and one being a Full Service station where they still clean your windshield and check your oil. The city offers a Museum, Library, General Store, Laundry Mat, Motel, Bar and Grill, Liquor Store, Dollar General and many small businesses. The Clay County Park is located basically across the street from the city. The Park is often referred to as a city within the city on holiday weekends. Wakefield is a wonderful community to be part of and to have the amenities that it offers to the many people that pass through.

Clay County Park Development

- The Clay County Park was developed in the late 1960's through the U.S. Army Corps of Engineers as a Campground as well as many other campgrounds around Milford Lake. It is located on the Northwest end of the almost 16,000 acer reservoir where part of the Town of Wakefield used to be. The almost 100 acre area started as a place for families, campers, boaters, anglers and hunters to enjoy the great outdoors.

CardCow.com

Clay County Park Growth

- Clay County took over a lease agreement from the Corps to maintain and develop the area. Over the years starting as a tent campground it attracted RVs from Teardrops to Airstreams. As the area grew with the installation of a Marina which was taking out back around the Flood of 1993, along came utilities of power and water. Clay County Park now offers 267 RV spots with 28 of them including sewer hookup.

47N

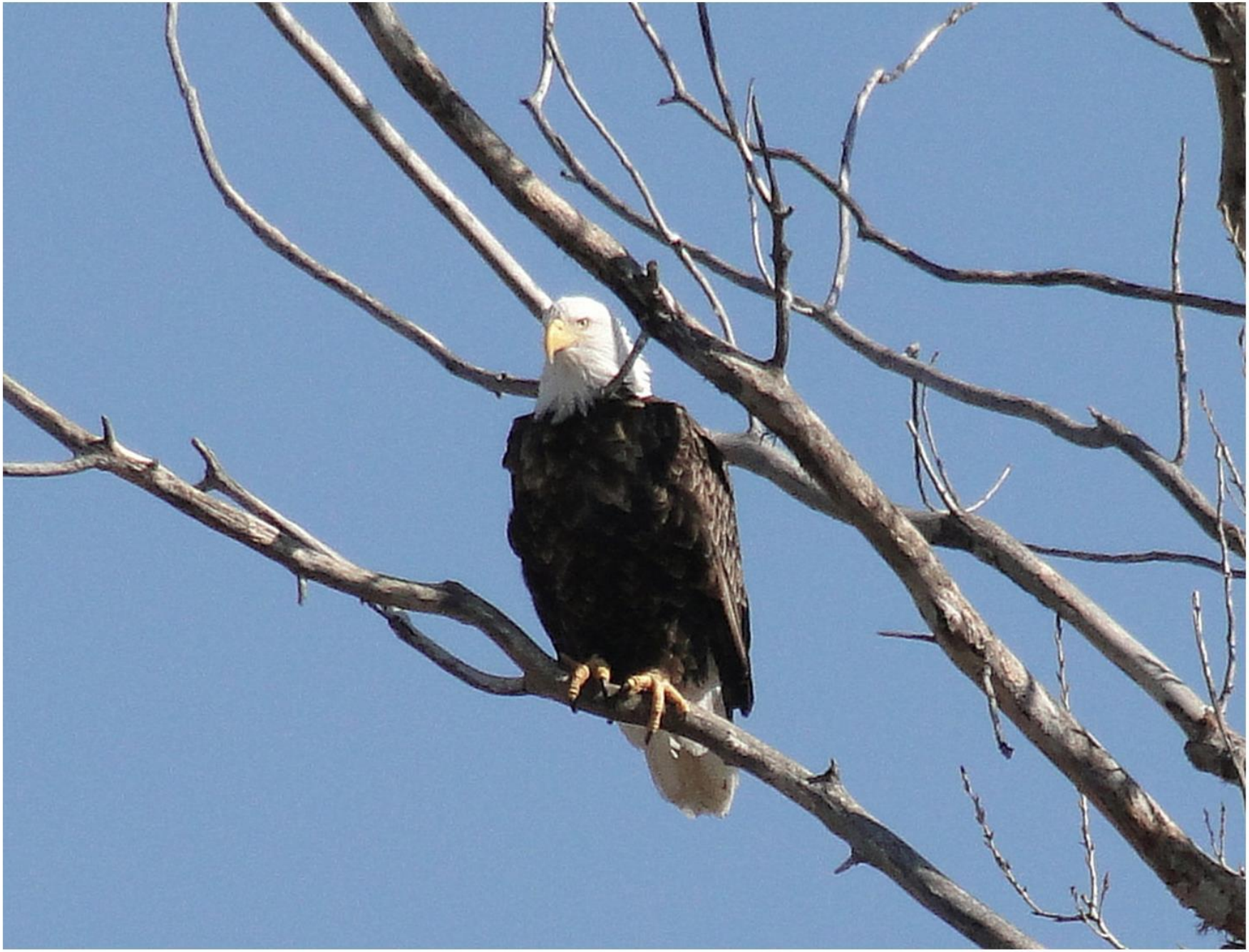

Blue – Green Algae

Blue – Green Algae

- Some blue-green algae produce toxins that pose a health risk to people and animals. Health effects could occur when surface scums or water containing high levels of blue-green algal toxins are swallowed, through contact with the skin or when airborne droplets containing toxins are inhaled while swimming, boating, and skiing. A large percentage of the public will report "allergic" type reactions after exposure to blue-green algae, such as intestinal problems, respiratory problems, or skin irritations. Harmful Algae Blooms can appear (or disappear) rapidly.

LIBERTY
IN GOD WE TRUST
1983

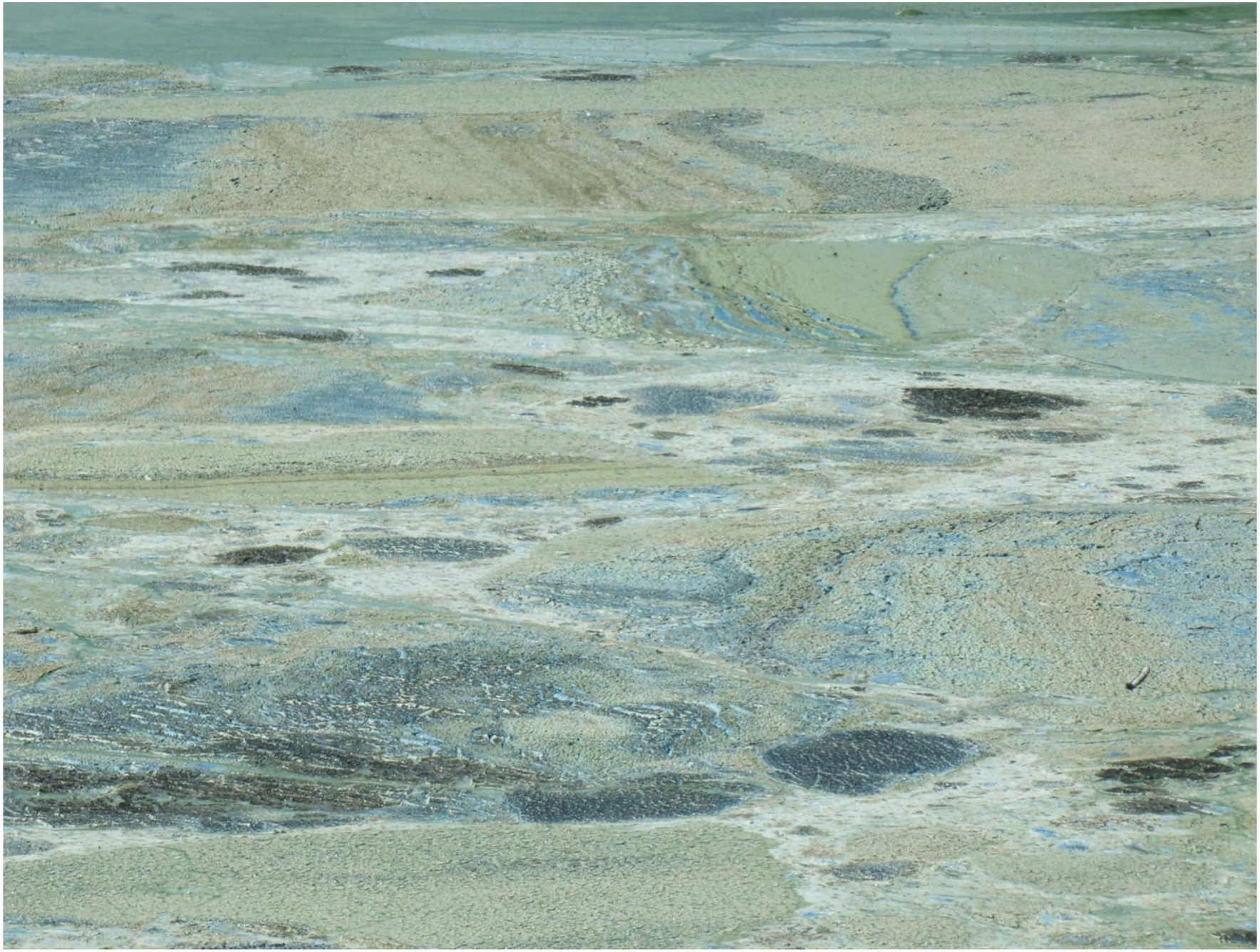

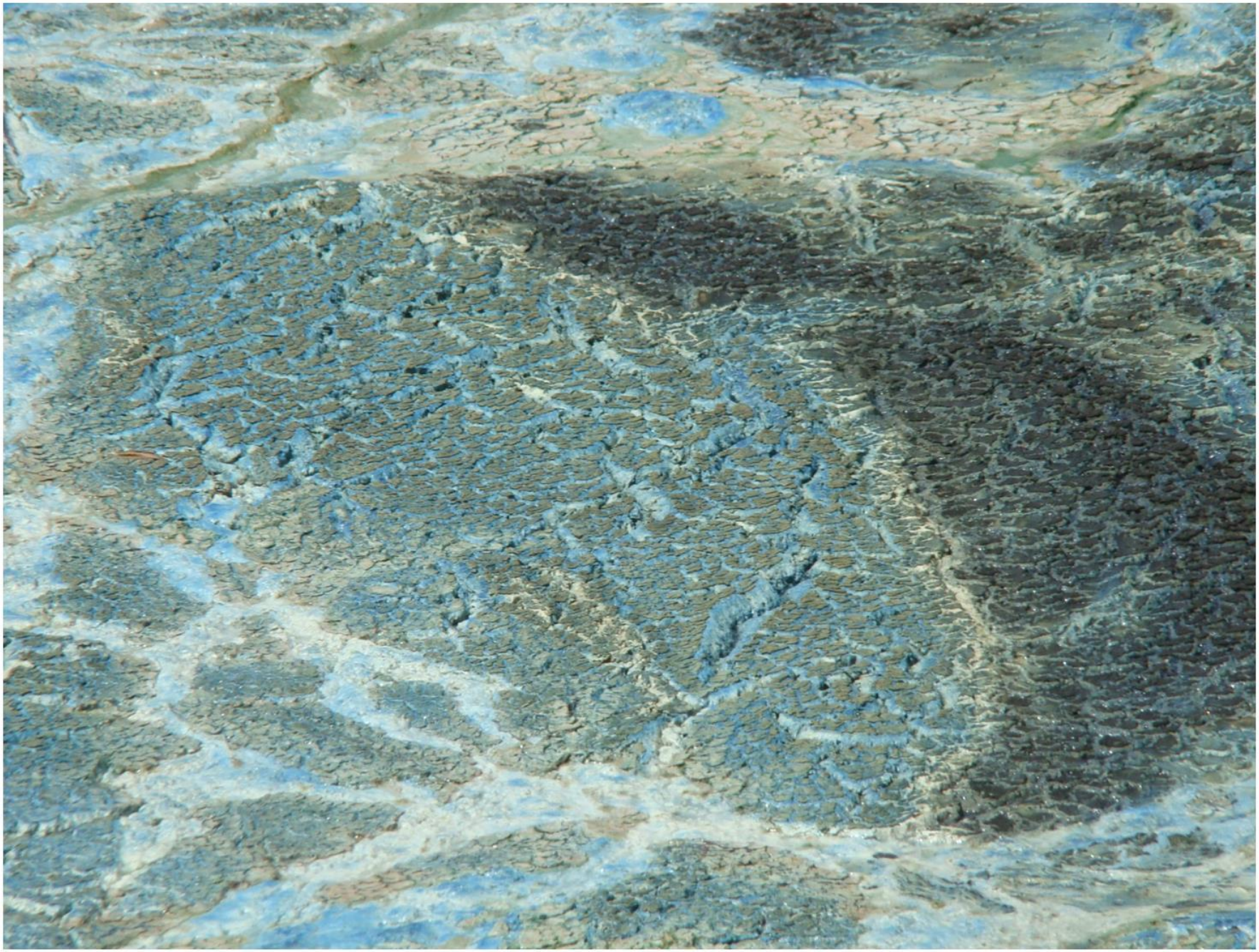

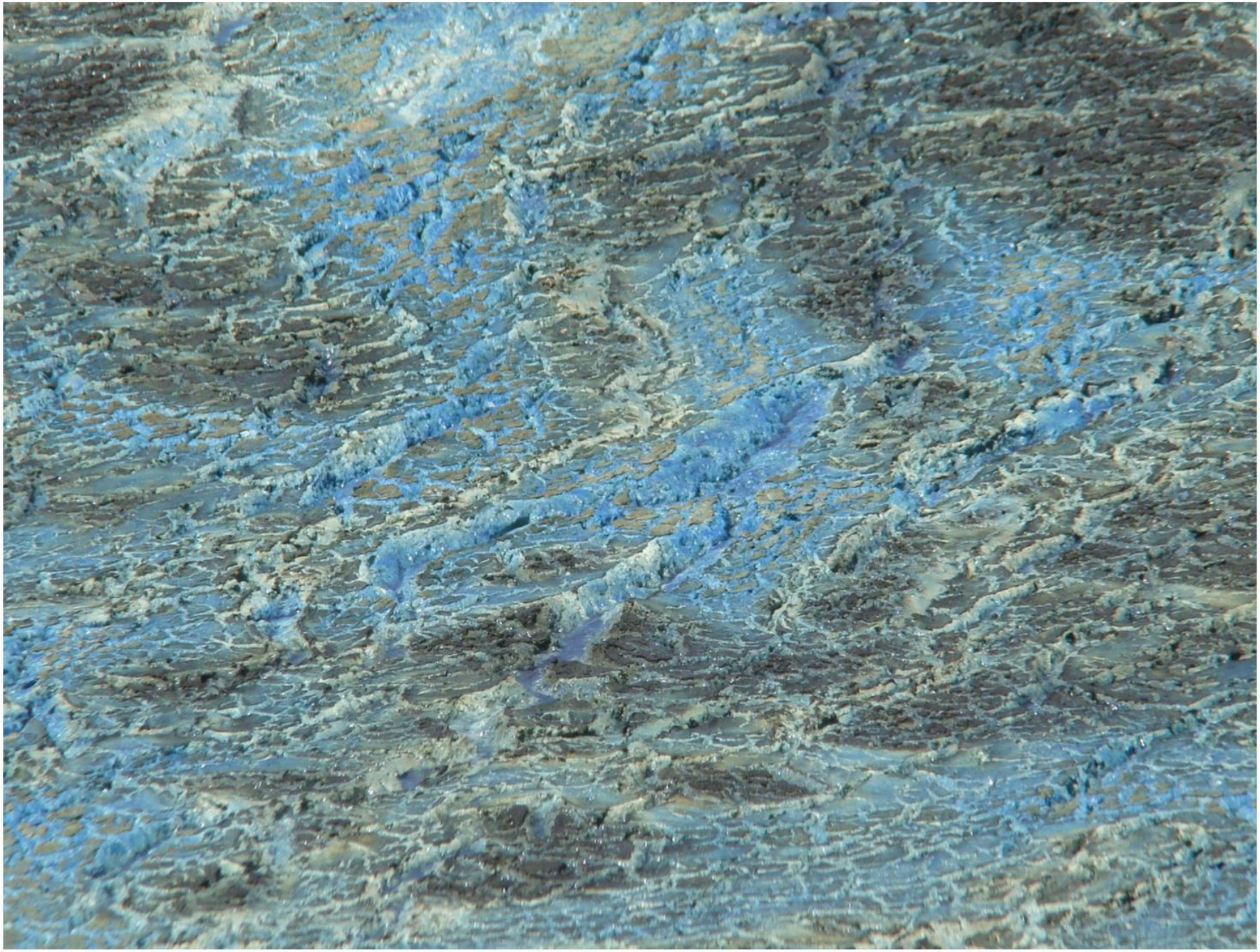

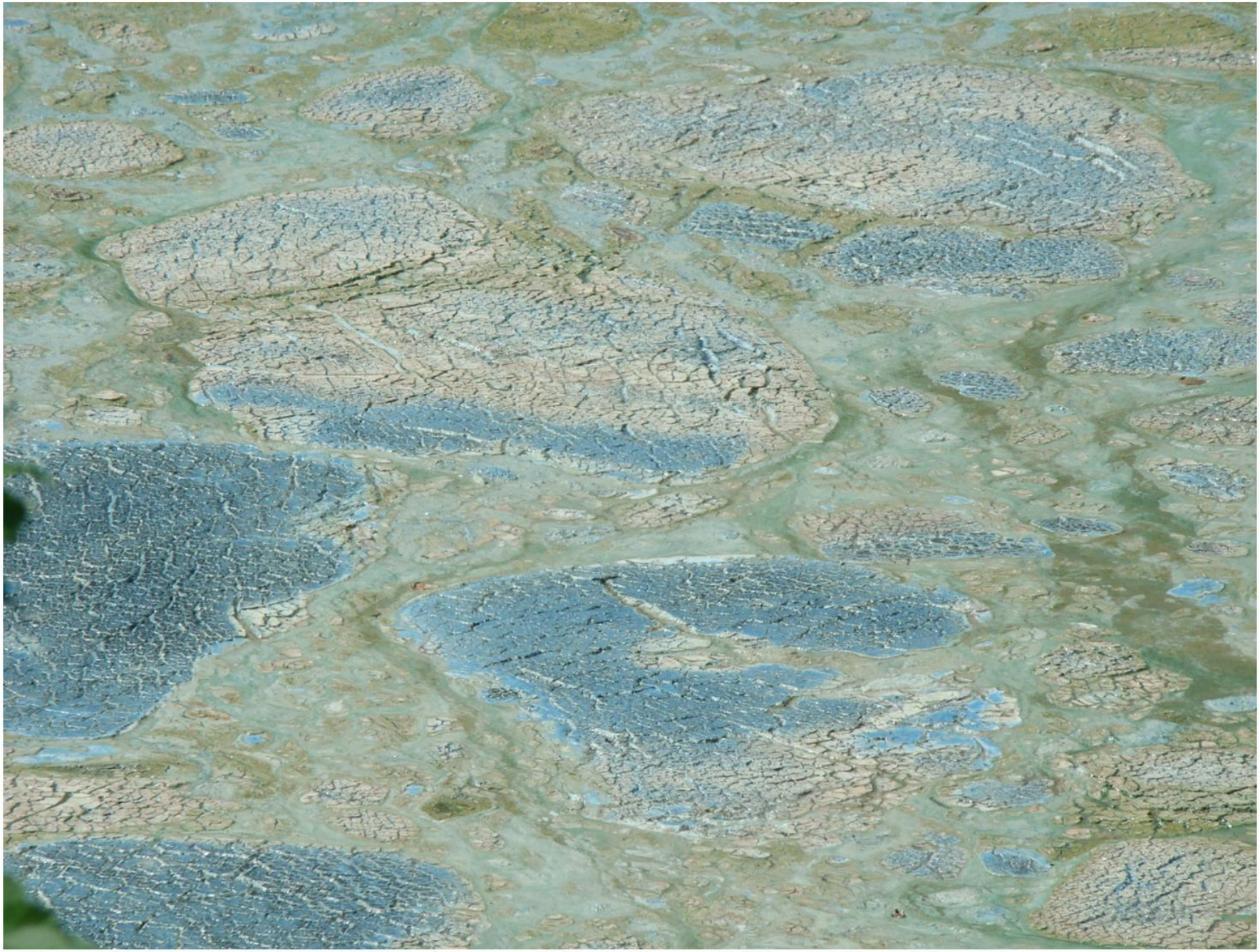

- Blue-Green Algae Reduction
- CLAY COUNTY PARK
- KANSAS STATE UNIVERSITY MECHANICAL AND NUCLEAR ENGINEERING
- SENIOR DESIGN REVIEW
- Sponsor – Mike Carney
- Advisor - Dr. David Pacey
- Connor Clements, Cody Nieman, Emma Schinstock, Ben Schmanke, Keegan Tilton

Project Goals

- The primary goal of this group is to mitigate the algae blooms in the areas mentioned above. In addition to achieving this goal, our objectives are to:
- ● Research causes and prevention methods to reduce the algae blooms
- ● Help prevent the hazardous health effects caused by the algae
- ● Reduce the unpleasant smell/abundance of the blooms
- ● Help recreate usable areas around Clay County Park
- ● Adhere to any natural limitations of the reservoir (water level, wildlife, power supply, etc.)
- ● Produce a working prototype to test before our graduation in spring of 2017

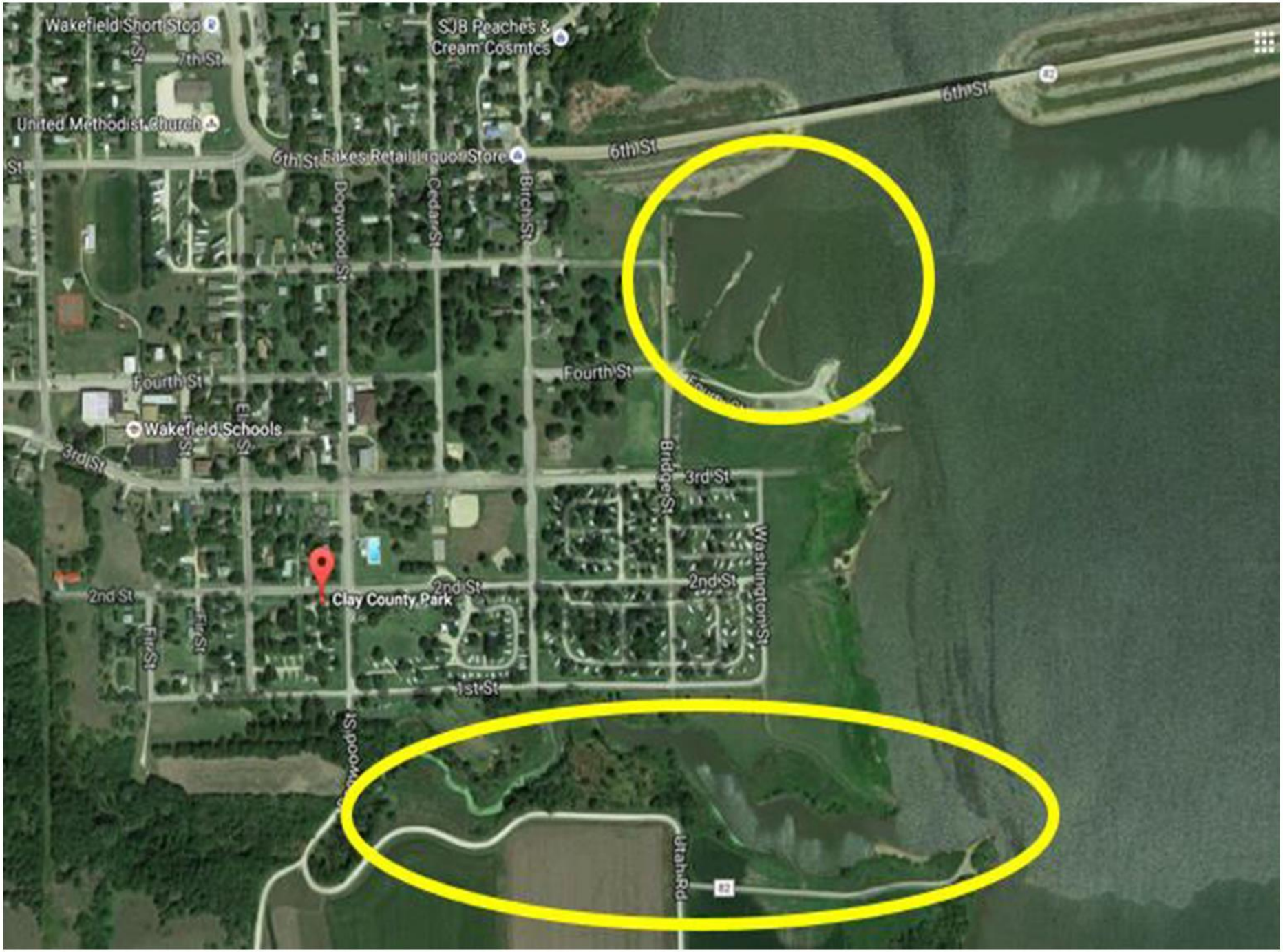
Wakefield Short Stop
SJB Peaches & Cream Cosmtcs
7th St
United Methodist Church
6th St
Fakes Retail Liquor Store
6th St
6th St
Dogwood St
Cedar St
Birch St
Fourth St
Fourth St
Wakefield Schools
3rd St
3rd St
Bridge St
Washington St
2nd St
2nd St
2nd St
Clay County Park
First St
First St
1st St
Dogwood St
Utah Rd
82

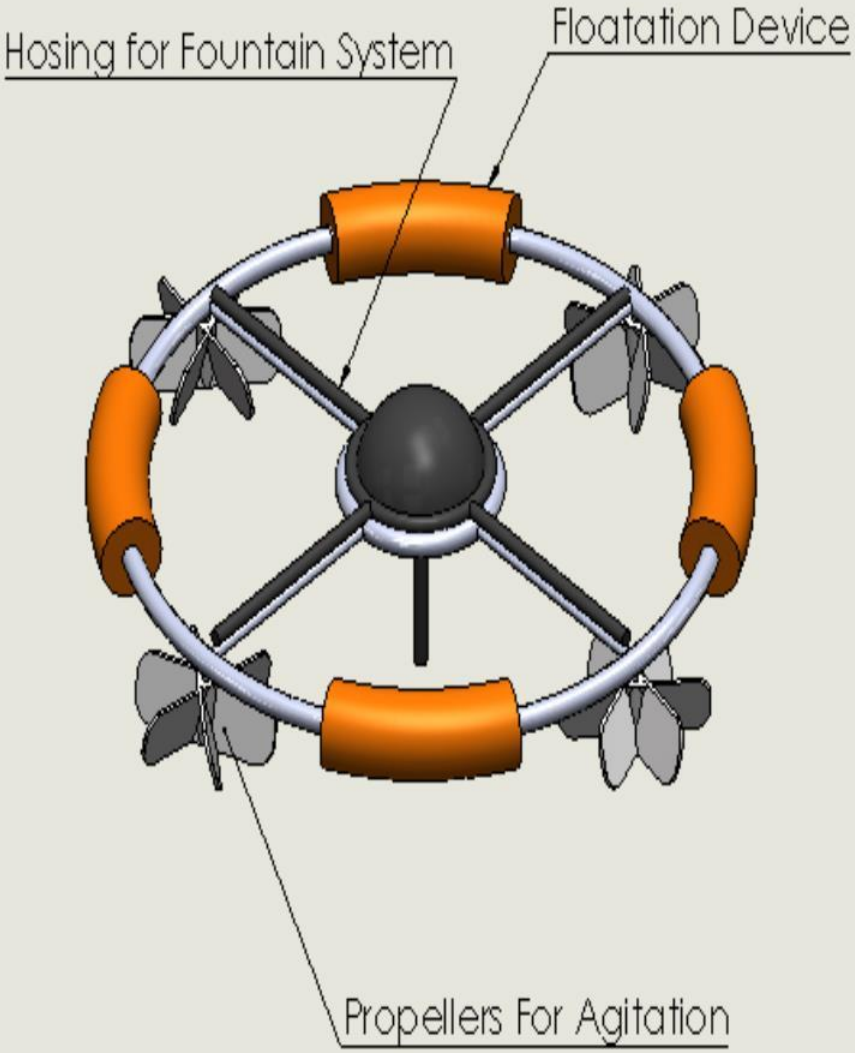
Hosing for Fountain System
Floatation Device
Propellers For Agitation

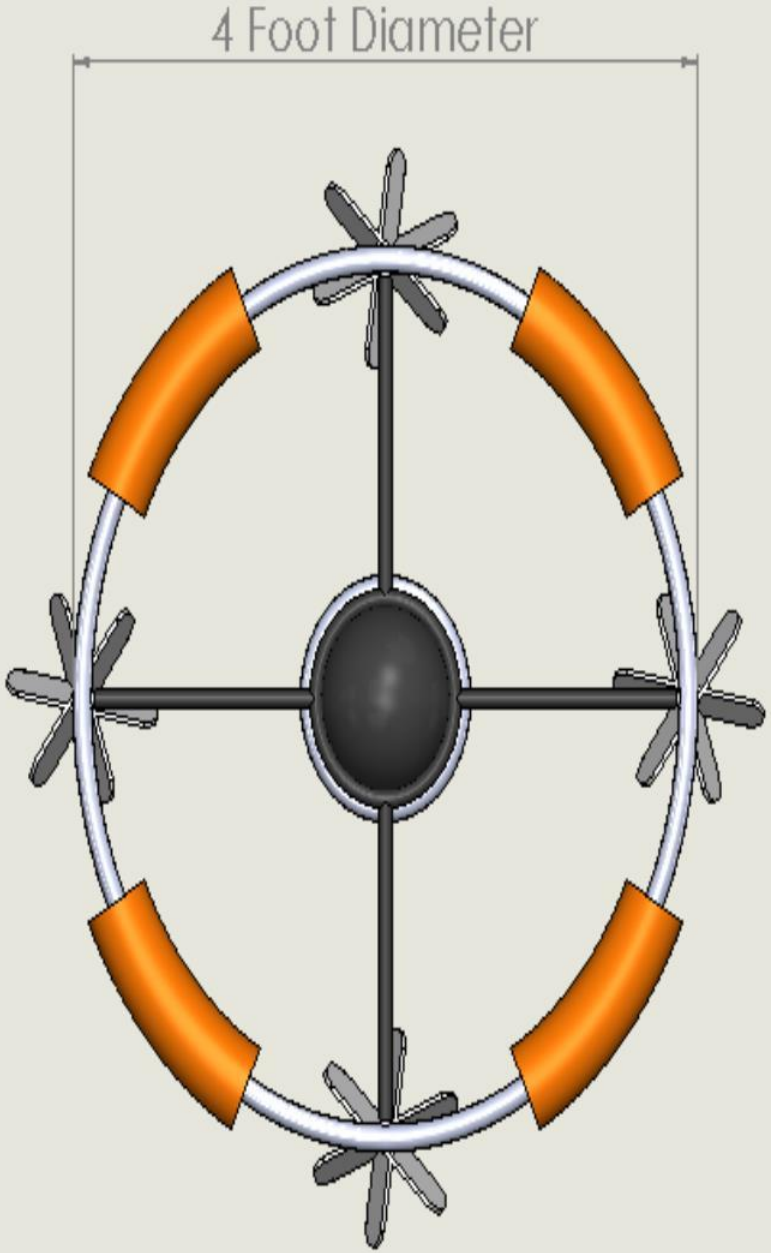
4 Foot Diameter

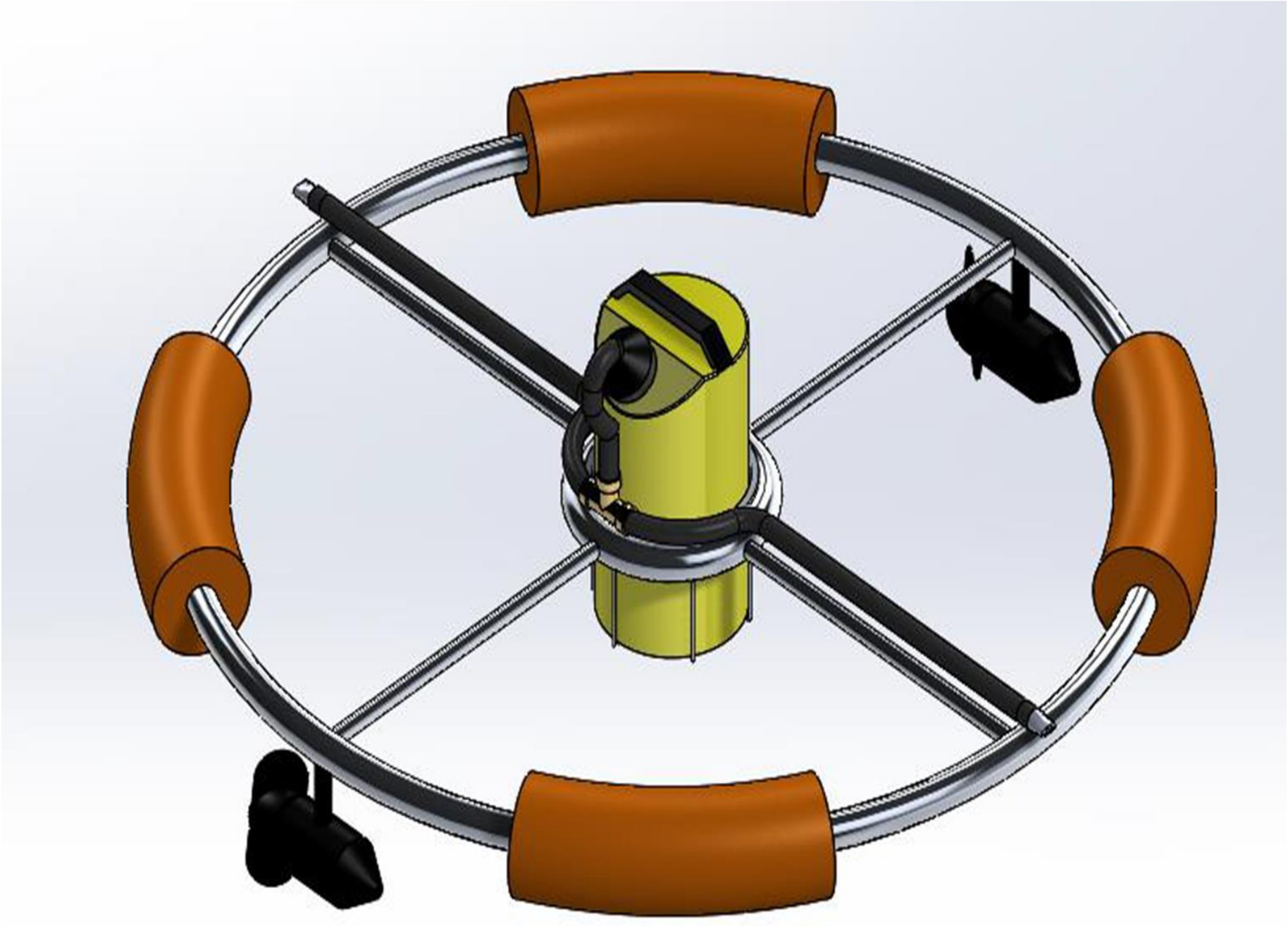

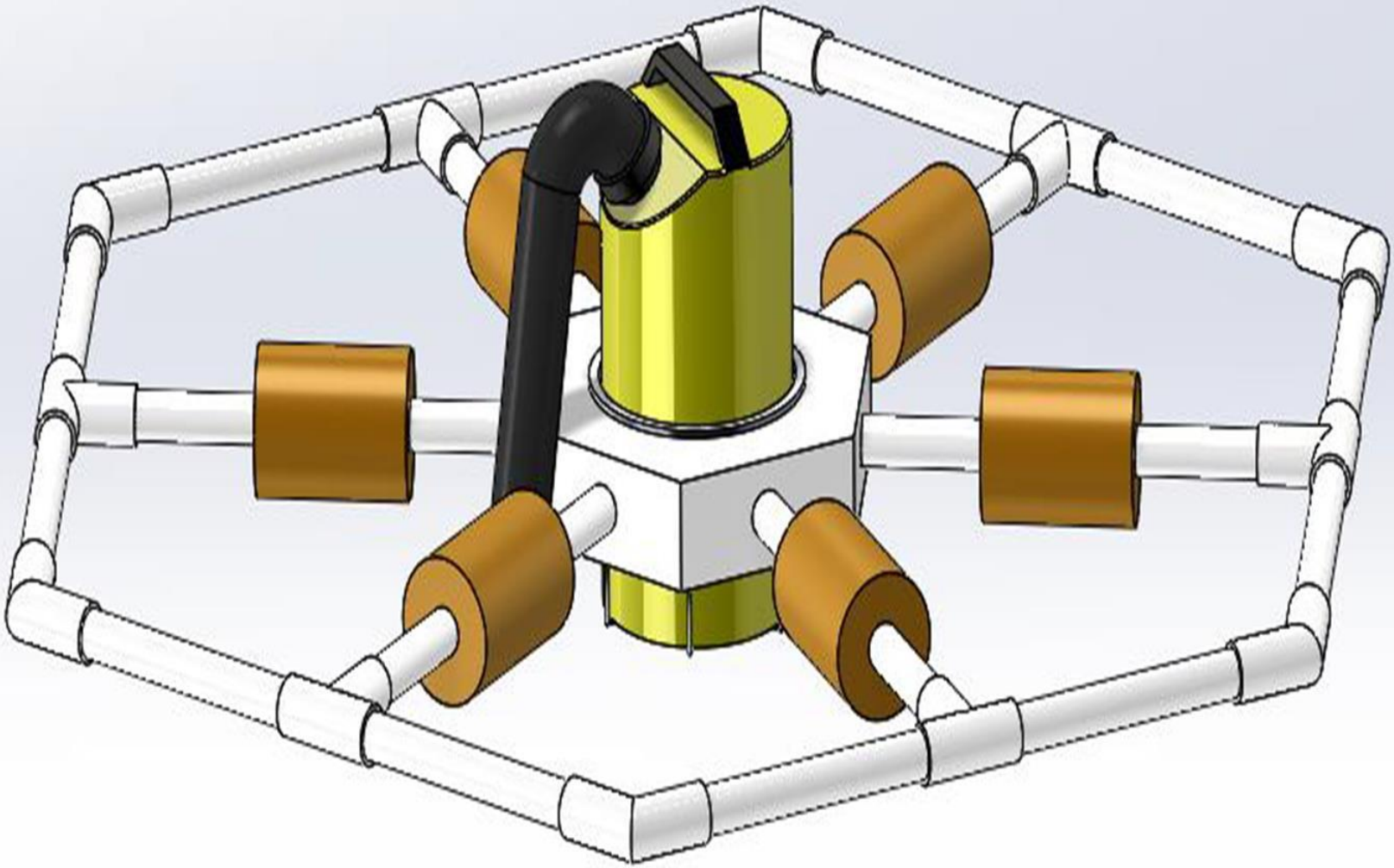

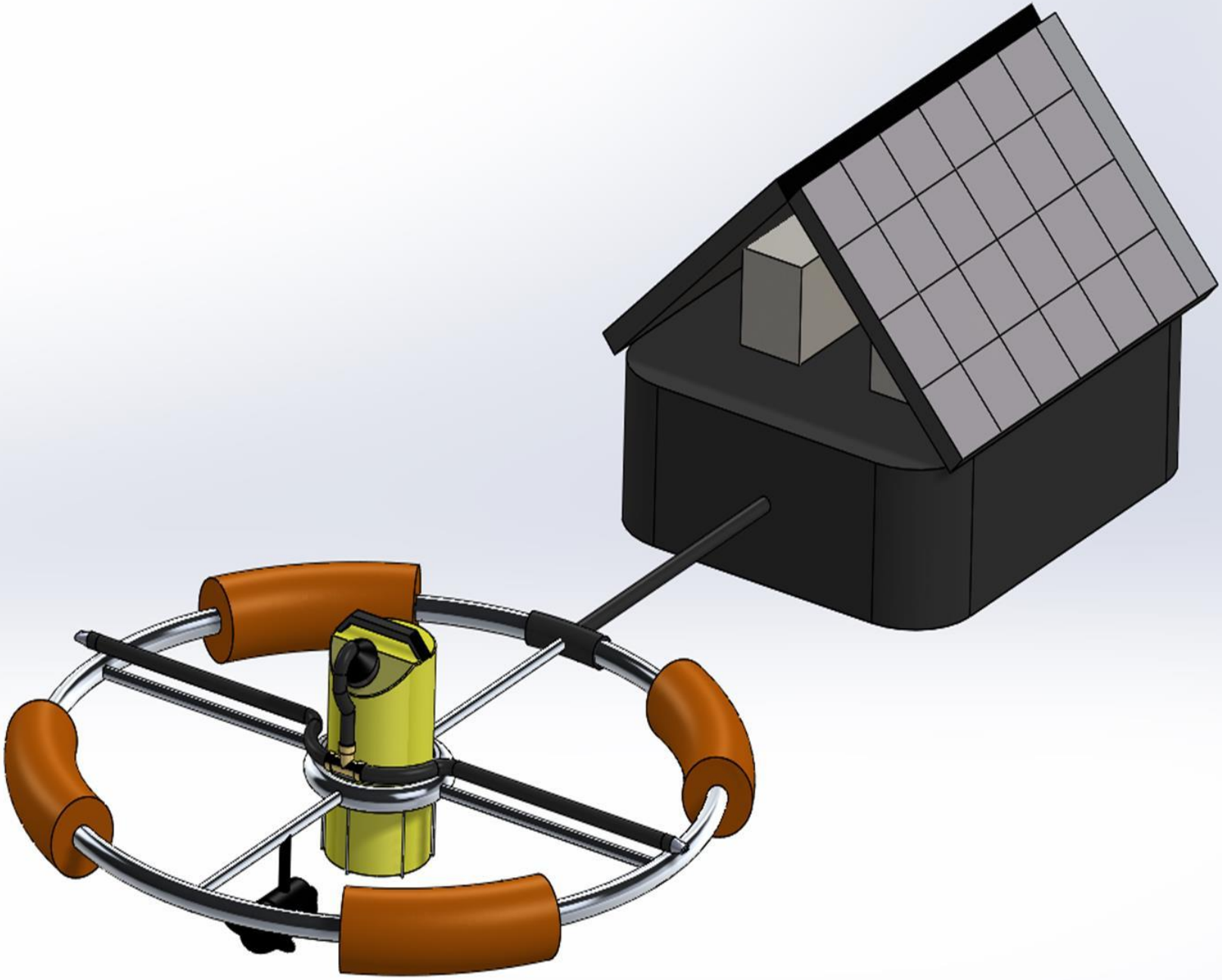

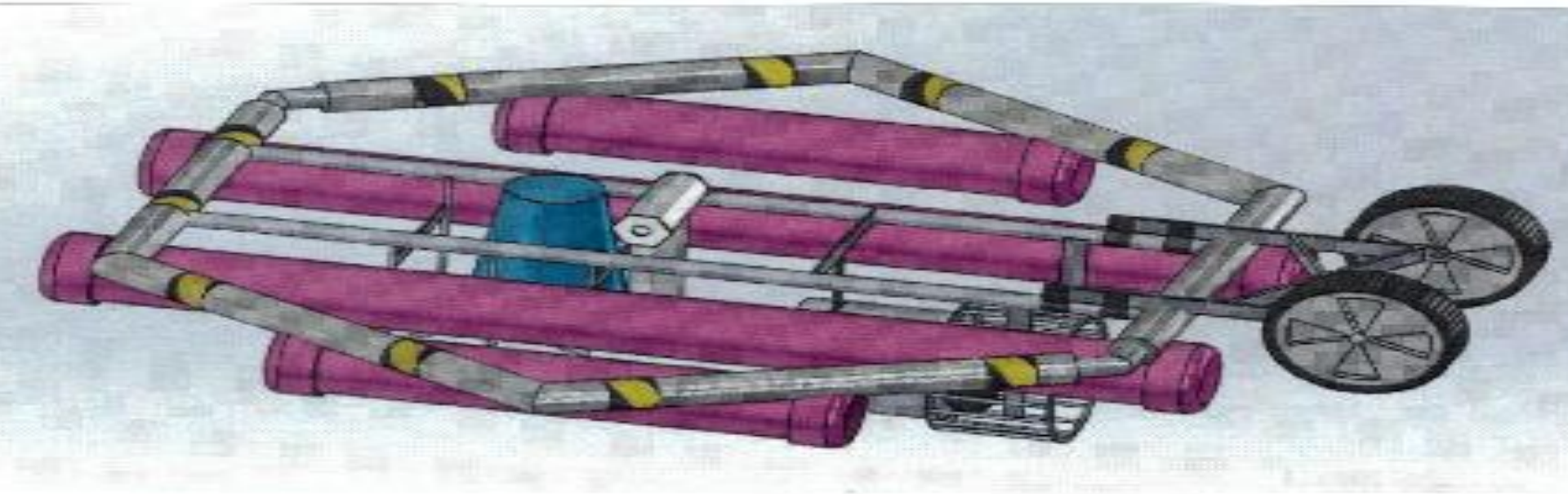

Clay County Park

Wakefield, Kansas

Stay the weekend or spend a season.