BURNS McDONNELL

Wastewater Effluent Feasibility Study

Garden City, Kansas

Water Use Snapshot

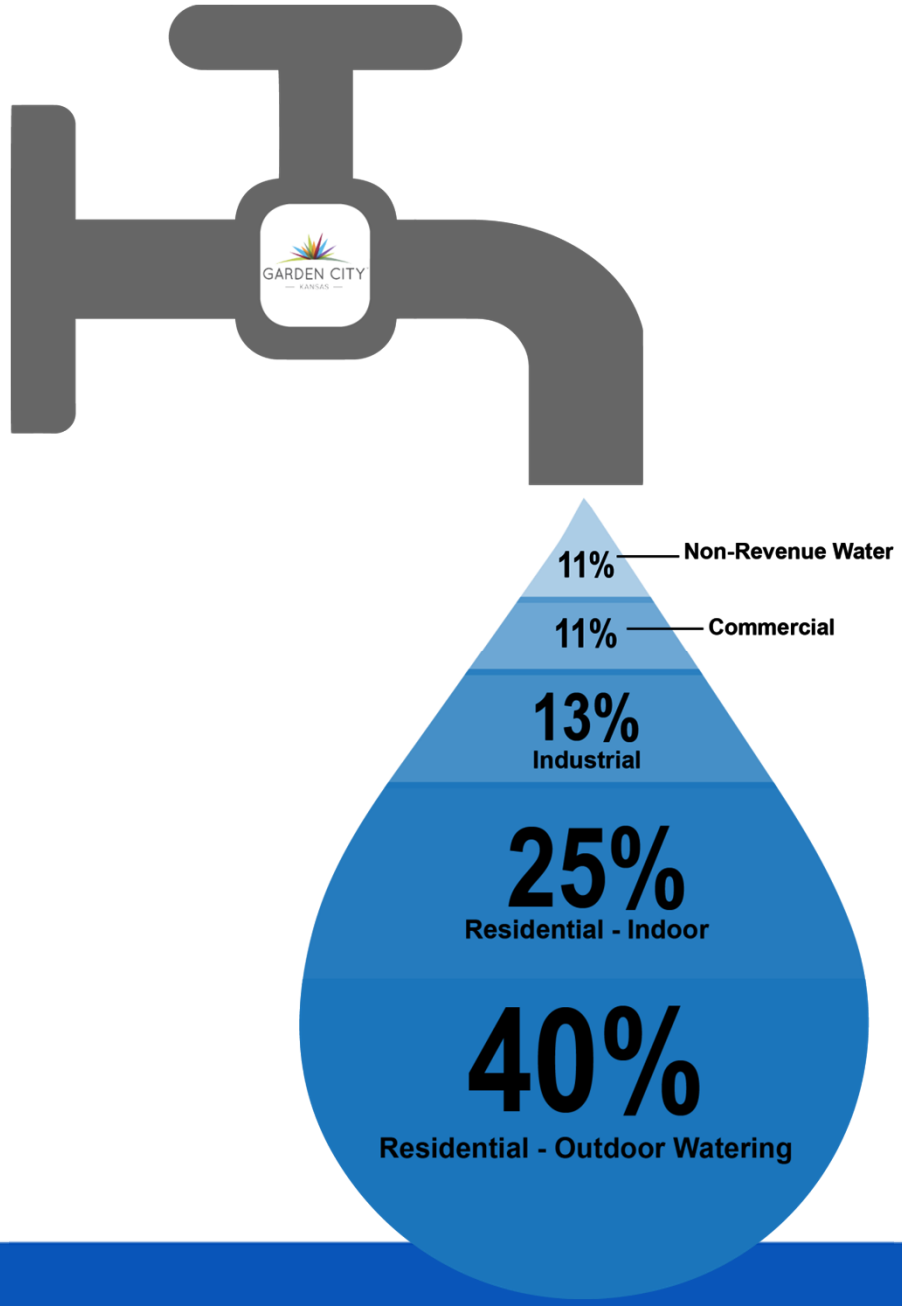

Project Objectives

- Support and embrace economic development, industrial growth, and conservation-minded consumptive uses of water
- Improve quality of life for residents
- Expand the City's water portfolio
- Lay the groundwork for future specific reuse project considerations and implementation opportunities

Project Objective

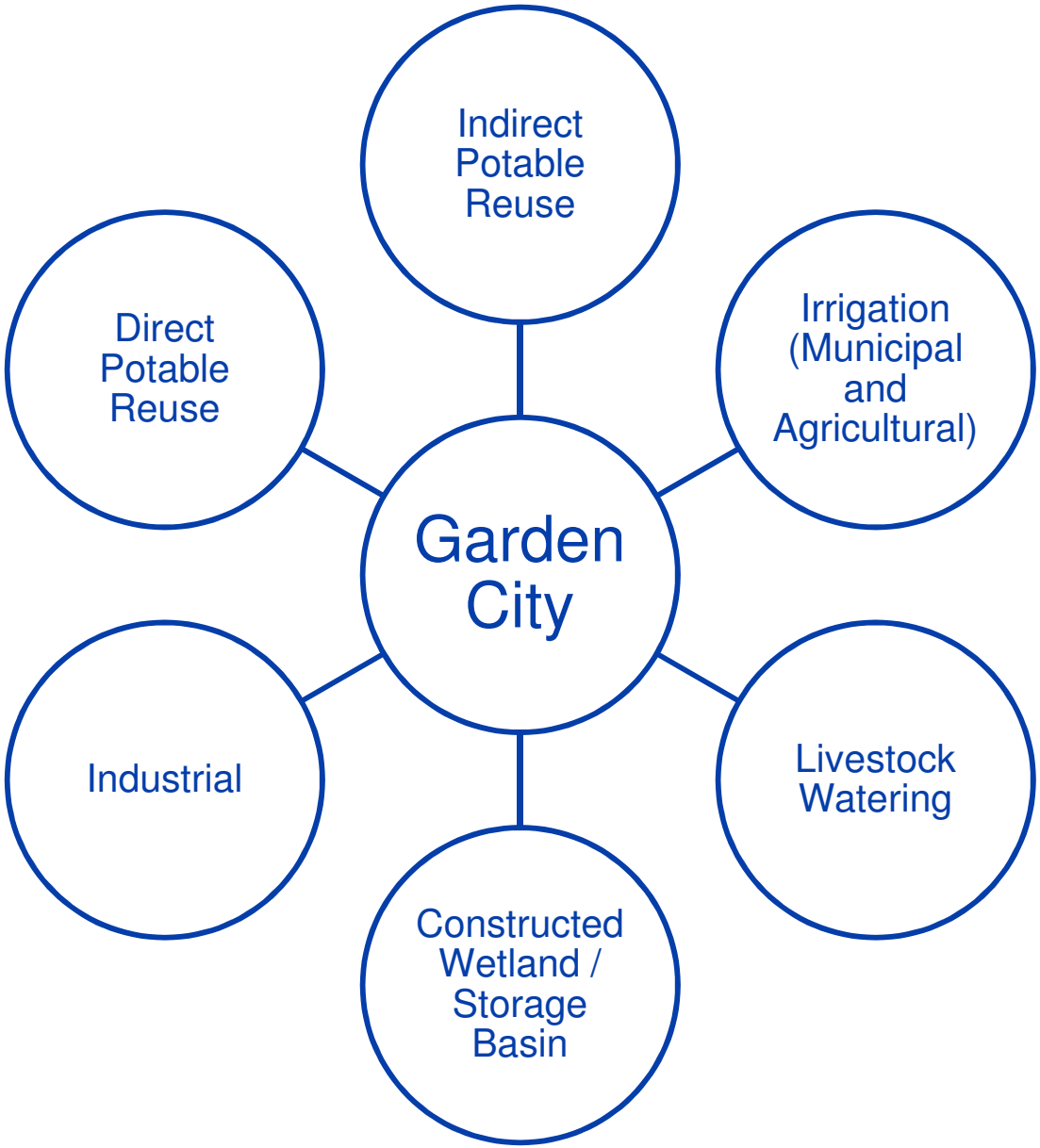

Sources of Potential Reuse

Dairy Farmers of America

- Estimated flows of 0.6 to 1.0 MGD
- Effluent water quality is unknown at this time except that they will meet the NPDES permit requirements.

City Wastewater Effluent

- 2.5 MGD effluent flow rate (average).
- Wheatland may take up to 2.0 MGD until 2025
- Known water quality

City WWTP Process Flow Diagram

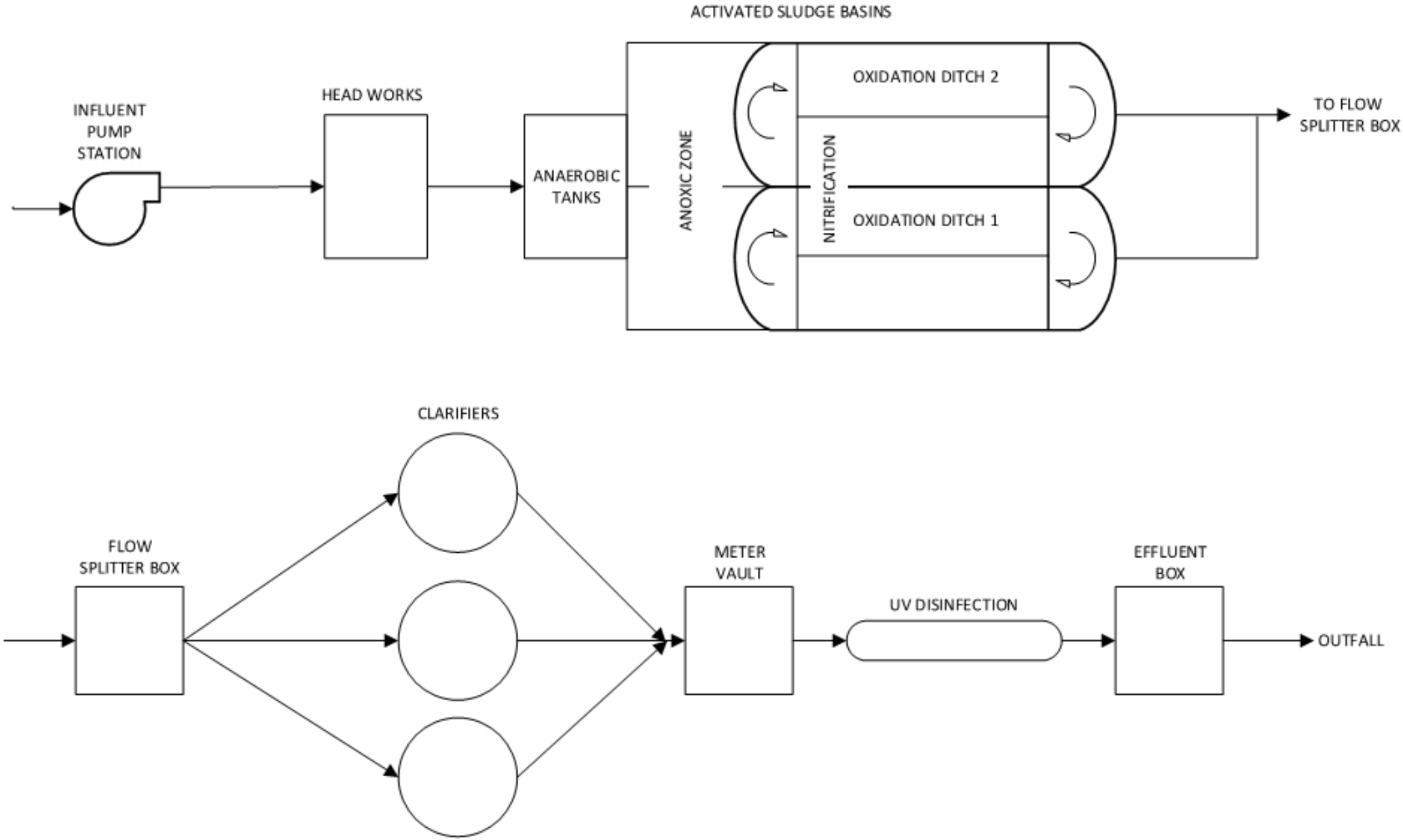

DFA Facility Process Flow Diagram

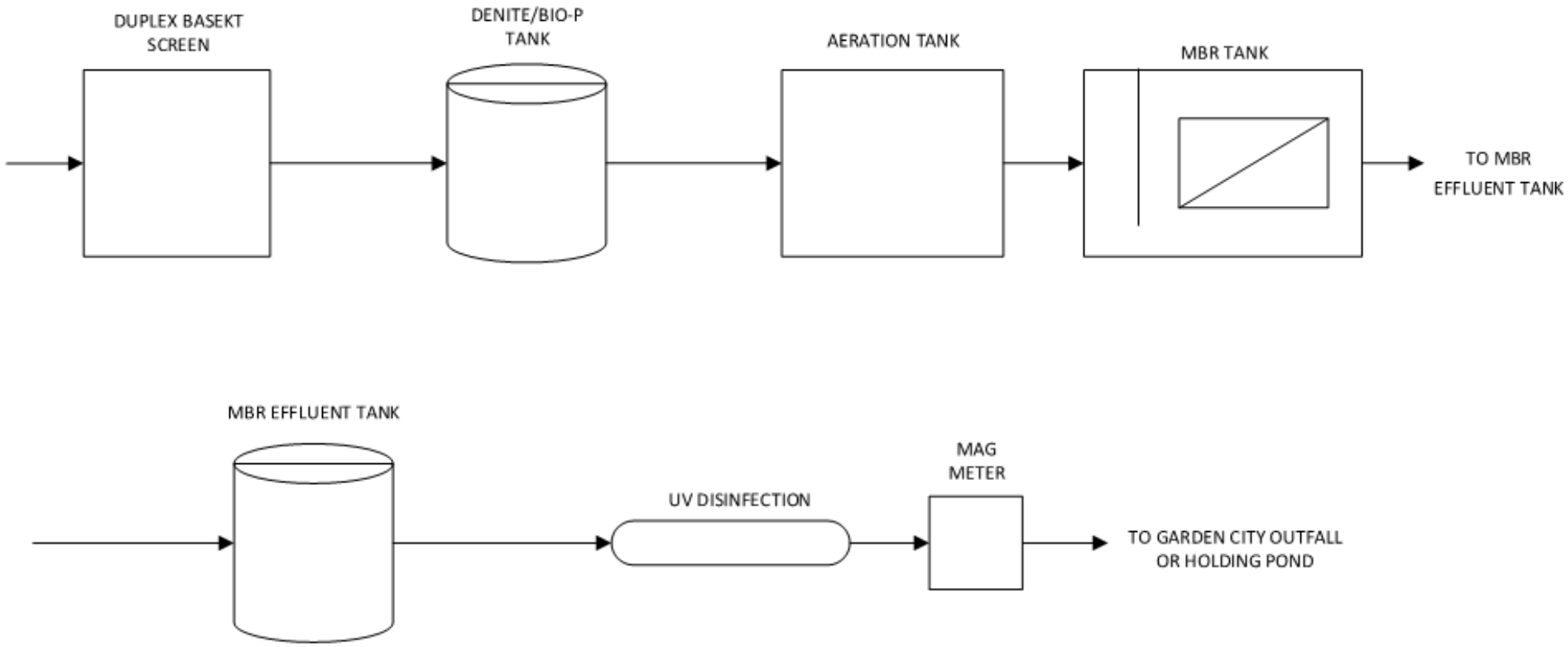

Regulatory Overview

UNITED STATES ENVIRONMENTAL PROTECTION AGENCY

AD ASTRA PER ASPERA
Kansas
Department of Health and Environment

CalEPA
California Environmental Protection Agency

Water Uses and Demands

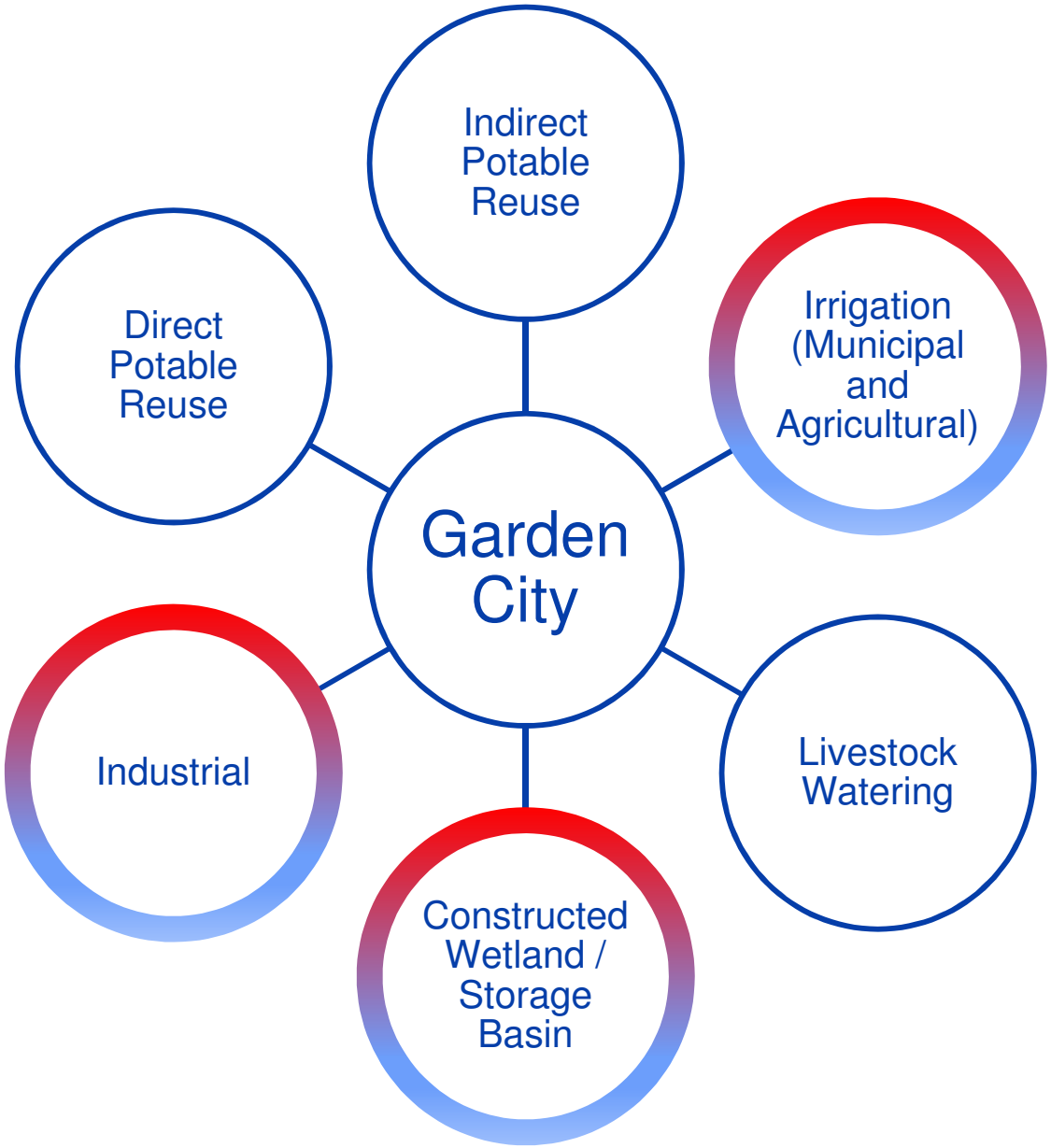

Garden City Aerial View

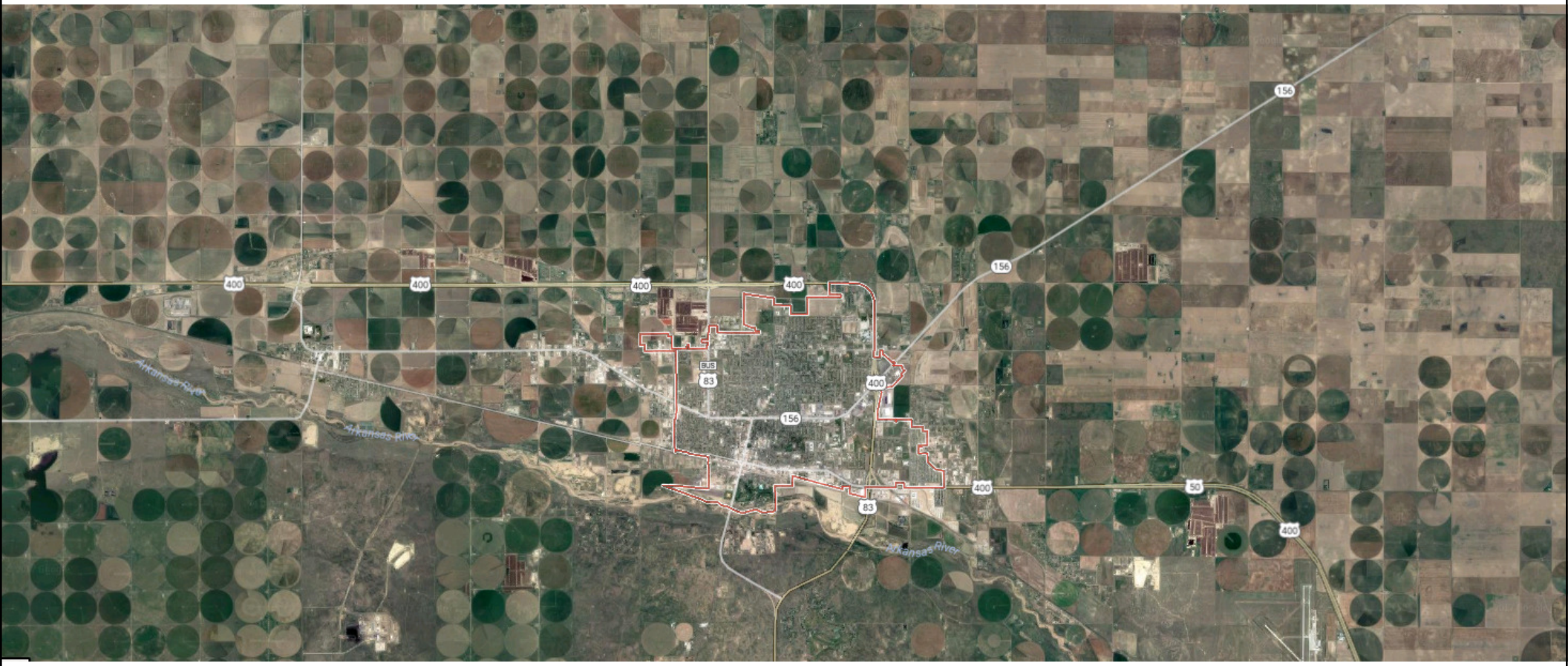

Treatment Requirements

- Industrial
  - Based on end user
- Irrigation
  - Low potential for human contact: disinfection
  - High potential for human contact: filtration and disinfection
- Impoundments
  - No specific KDHE requirements
  - California requirements
- Direct and Indirect Potable Reuse

Reuse Type	Example	Treatment Improvements Required per KDHE		Improvements Required per CA Title 22	
		DFA Facility[1]	Garden City WWTF	DFA Facility[1]	Garden City WWTF
Irrigation: Low probability of human contact	Crop and pasture land (crops not for direct human consumption)	None	None	None	None
	Golf courses, public parks, cemeteries, commercial properties, or athletic fields with irrigation during restricted public access hours	None	None	None	Possible improvements to disinfection
Irrigation: High probability of human contact	Athletic fields, highway rest areas, freeway landscaping, public parks	None	Filtration and possible improvements to disinfection	None	Possible improvements to disinfection
	Food crops (including edible root crops where recycled water contacts edible portion), unrestricted access parks and playgrounds, school yards, residential landscaping and golf courses	Case-by-case	Case-by-case	None	Coagulation and filtration or membrane filtration[2]; improvements to disinfection; turbidity monitoring
Impoundments: Low probability of human contact	Restricted recreational impoundments, such as fishing, boating and other non-body-contact water recreational activities, golf course hazards, landscape impoundment without decorative fountains	Case-by-case	Case-by-case	None	Possible improvements to disinfection
Impoundments: High Probability of human contact	Recreational lakes, water features accessible to the public, fishing ponds	Case-by-case	Case-by-case	None	Filtration and improvements to disinfection
Environmental Impoundments	Constructed wetland, enhance natural wetlands, stream flow augmentation	Case-by-case	Case-by-case	None	Filtration and improvements to disinfection

Reuse Type	Example	Treatment Improvements Required per KDHE		Improvements Required per CA Title 22	
		DFA Facility[1]	Garden City WWTF	DFA Facility[1]	Garden City WWTF
Industrial Reuse: Low probability of human contact	Industrial boiler feed, cooling tower or air conditioning, backfill consolidation around nonpotable pipelines, mixing concrete, bottle or container cleaning or conveying, industrial process water not in contact with workers	Case-by-case	Case-by-case	None	Possible improvements to disinfection
Industrial Reuse: High probability of human contact	Industrial or commercial cooling or air conditioning with cooling tower, evaporative condenser, spraying or mist mechanism	Case-by-case	Case-by-case	Turbidity monitoring	Coagulation and filtration or membrane filtration[2]; improvements to disinfection; turbidity monitoring
Indirect Potable Reuse	Groundwater/aquifer recharge, discharge to surface water supplies	Case-by-case	Case-by-case	None	Coagulation and filtration or membrane filtration[2]; minimum of three separate treatment processes to achieve 12-log enteric virus, 10-log giardia, and 10-log crypto reduction; turbidity monitoring
Direct Potable Reuse	Pipeline from wastewater treatment plant effluent to water treatment plant influent	Case-by-case	Case-by-case	Case-by-case	Case-by-case

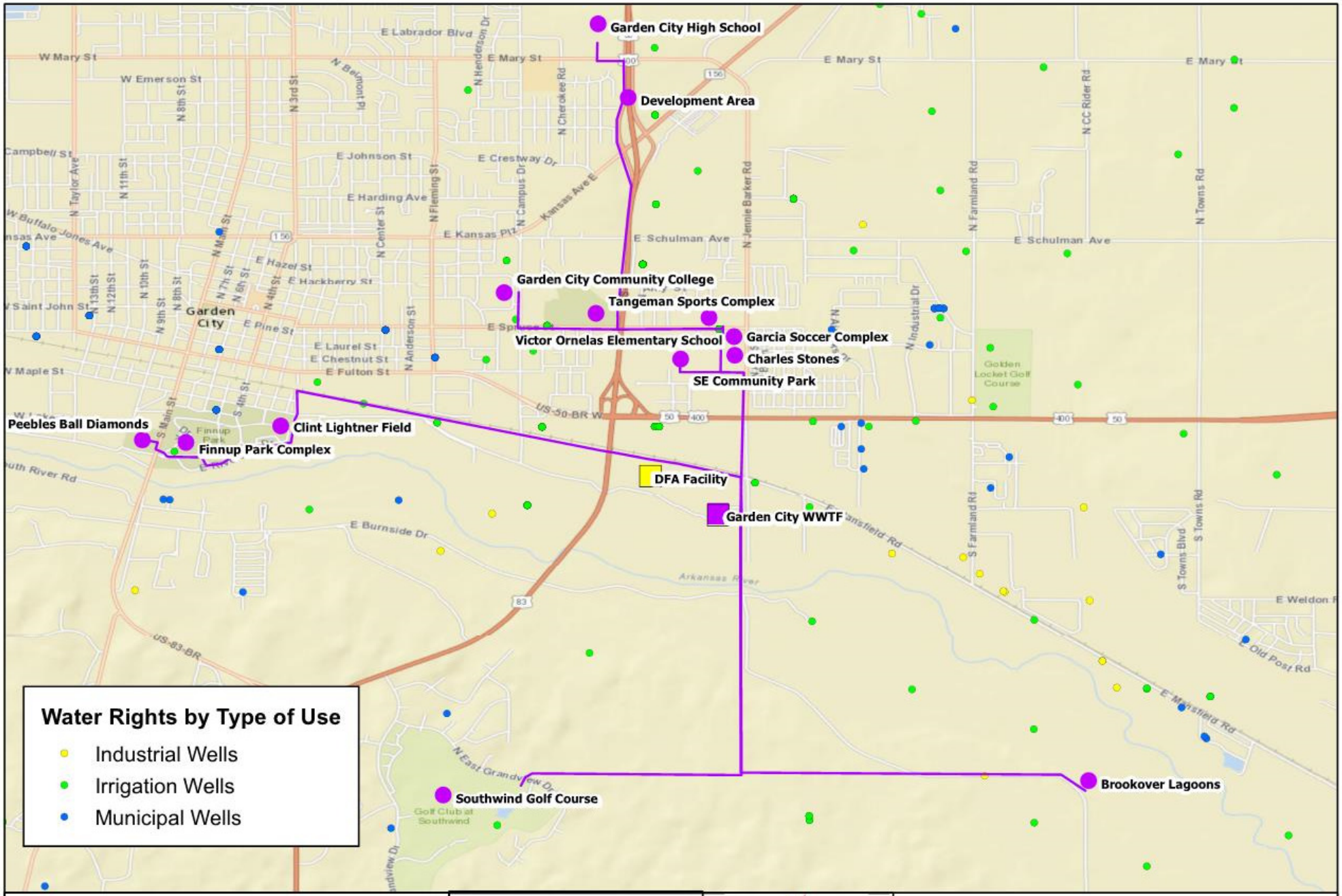

Legend

- Potential Reuse Lines
- Potential Reuse Site
- DFA Facility
- Garden City WWTF

N

1:45,000

0 0.25 0.5 1 Miles

GARDEN CITY KANSAS

BURNS McDONNELL

GARDEN CITY, KS

WATER RIGHTS, POTENTIAL REUSE LOCATIONS AND CONVEYANCE

Population Growth + *Economic Growth* + *Promote A*

=

Of Conservation

WASTEWATER REUSE

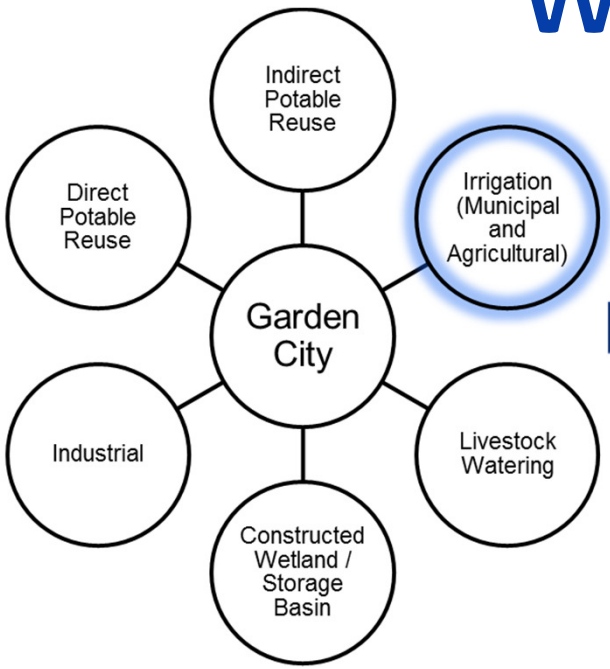

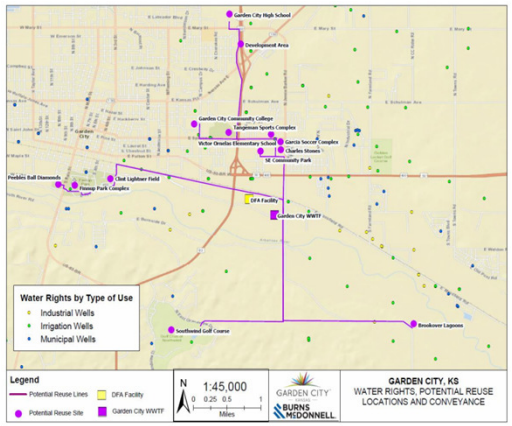

GARDEN CITY KANSAS

BURNS McDONNELL

- PHASE 1 • AGRICULTURAL
- PHASE 2 • PARK COMPLEX
- PHASE 3 • GOLF COURSE
- PHASE 4 • SOCCER COMPLEX
- PHASE 5 • POTABLE REUSE

Special thanks to the City of Garden City

Fred Jones

Water Resource Manager

BURNS McDONNELL SM